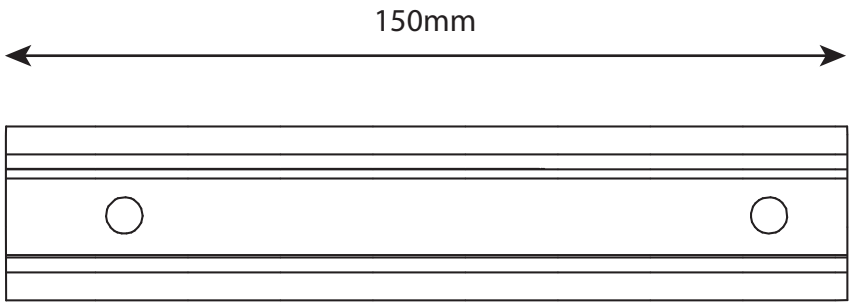
150mm

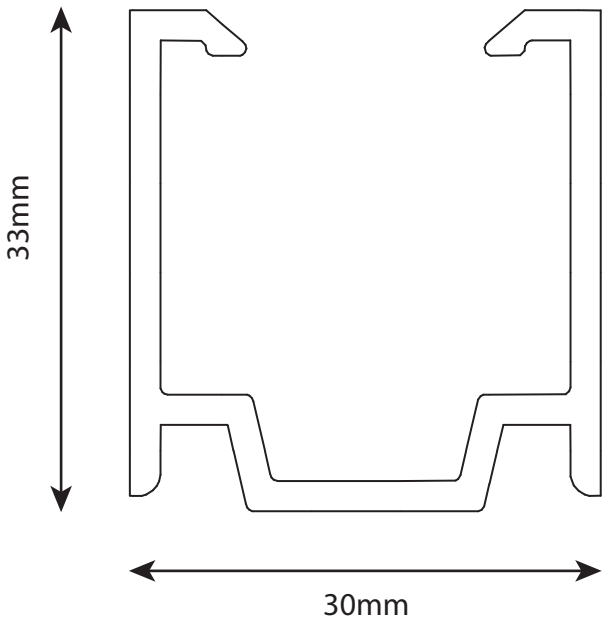
33mm
30mm